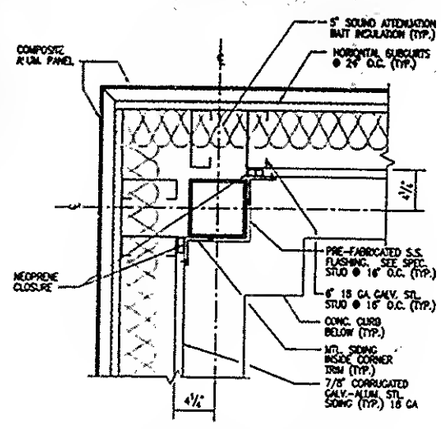

1 TYPICAL BULKHEAD EXTERIOR WALL CORNER DETAIL

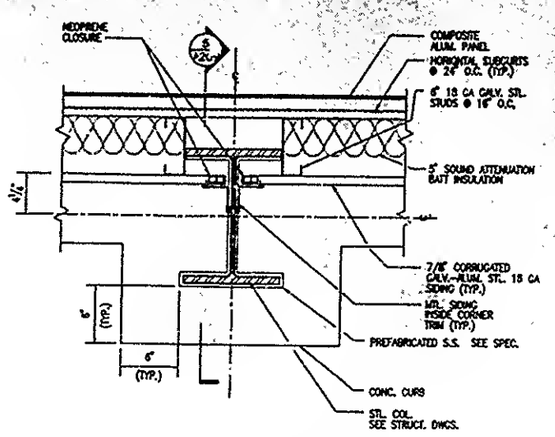

2 TYPICAL EXTERIOR WALL H COLUMN DETAIL

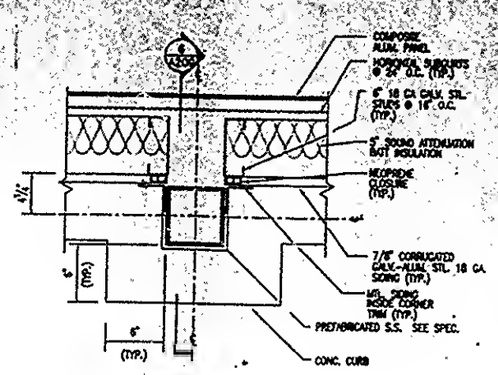

3 TYPICAL EXTERIOR WALL 6"x6" TUBE COLUMN DETAIL

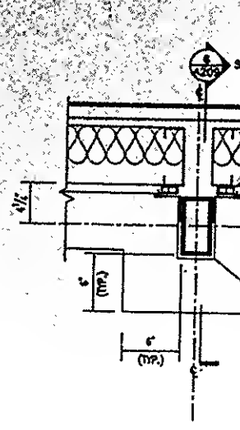

4 TYPICAL EXTE 3"x6" TUBE

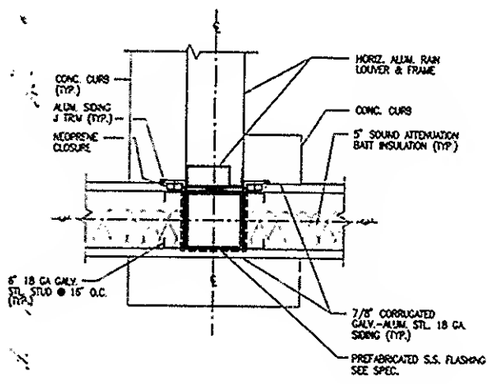

5 DETAIL

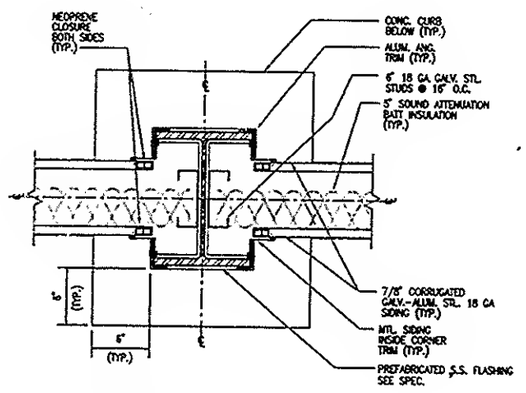

6 DETAIL

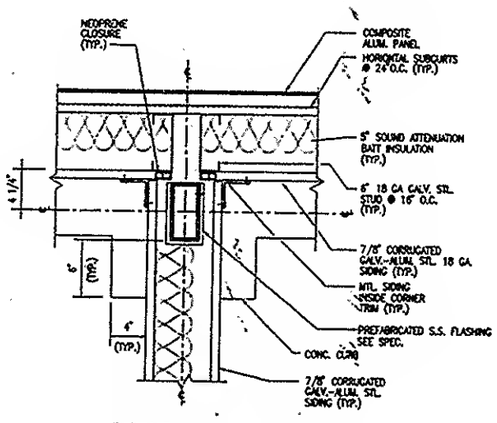

7 DETAIL

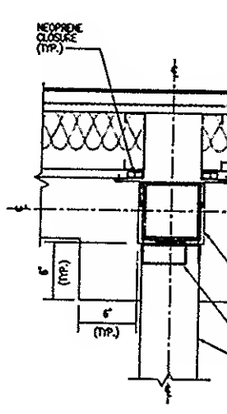

8 DETAIL

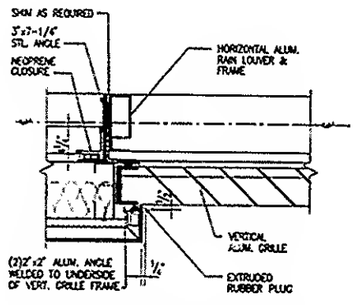

9 TYPICAL EXTERIOR COMPOSITE ALUM. PANEL JAMB DETAIL @ VERTICAL GRILL/RAIN LOUVER

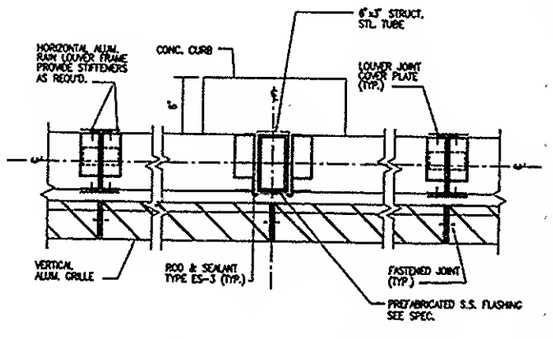

10 TYPICAL VERTICAL GRILLE & HORIZONTAL RAIN LOUVER JAMB DETAIL

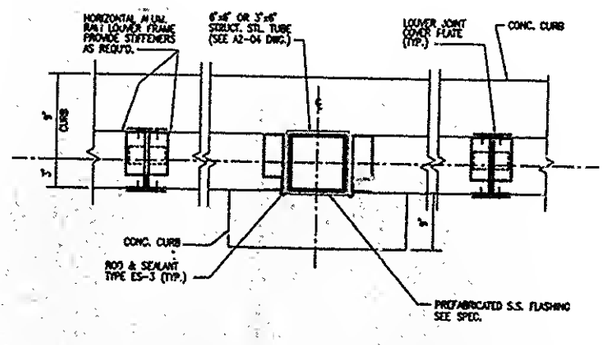

11 TYPICAL HORIZONTAL RAIN LOUVER JAMB DETAIL